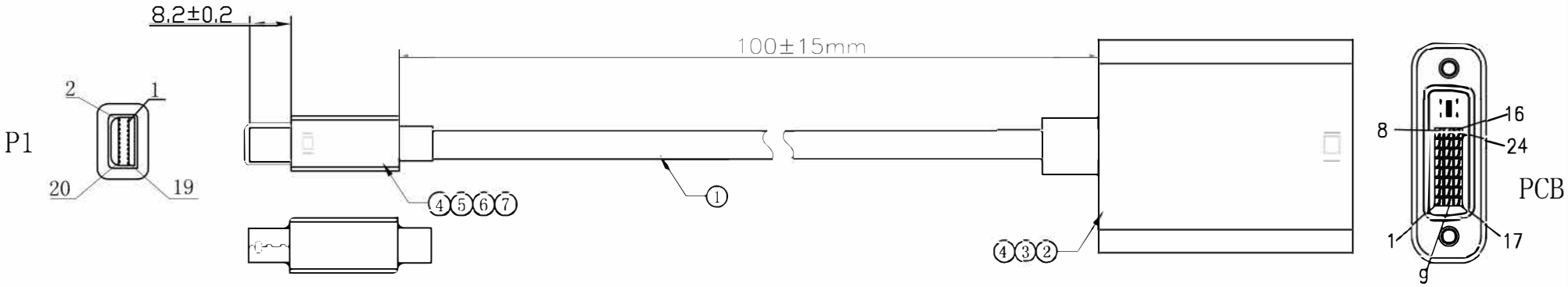

Electrical Test:

1. 100% Real machine test

PIN Assignment

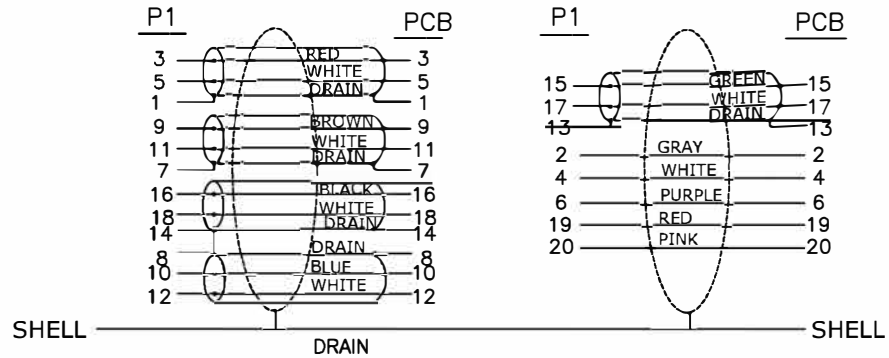

NO	DESCRIPTION	Q'TY	UNIT
7	MINI DP M ABS Shell Color:White	1	pcs
6	MINI DP M Insulation White SHELL GOLD plated	1	pcs
5	Transparent PE	2	g
4	65P PVC Color:White	10	g
3	DVI F ABS Shell Color:White	1	pcs
2	MP-D (MDP to DVI Adapter) /DP-D (DP to DVI Adapter) DVI (24+5) F With PCB	1	pcs
1	DP~[34AWG(7/0.06TC)+EAM]*5P+32AWG(7/0.08TC)*5C+AEB(16/5/0.12 85%AL)●D:4.5MM Color:White	0.15	M

	TOLERANCE INCHES	M/M
.X	.015	.30
.XX	.010	.10
.XXX	.005	.05

DRAWN BY

CHECK BY

APPD BY

Unirise

TITLE: Mini DP M to DVI F

CUSTOMER :

CUSTOMER P/N : MDPDVI-06I

SCALE NONE

UNIT MM

DATE 2019.07.03

DRAWING NO. :

REV. A0

1/1